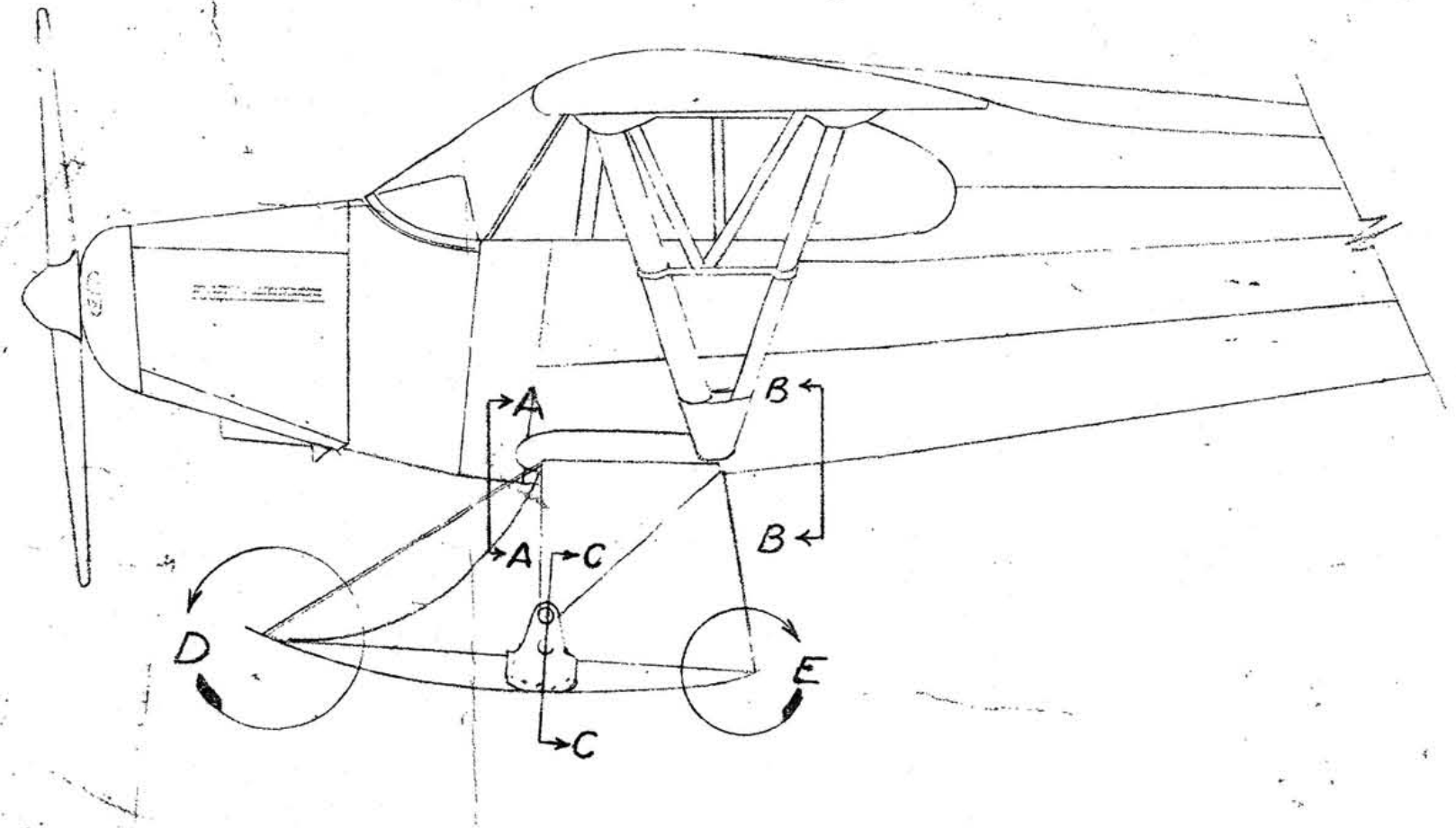

SIDE VIEW AIRCRAFT
SCALE ~ 1/24 SIZE

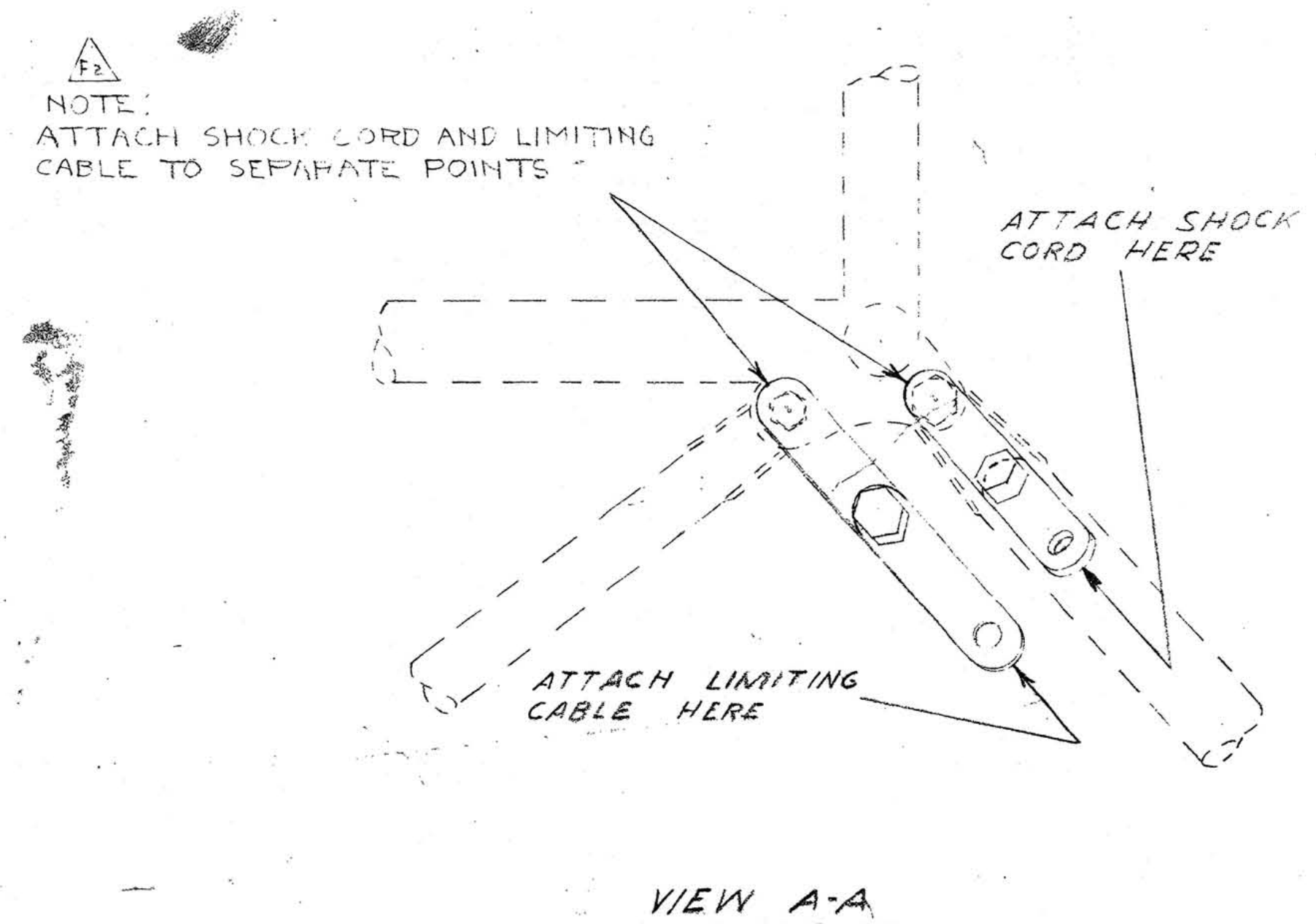
F2
NOTE:
ATTACH SHOCK CORD AND LIMITING CABLE TO SEPARATE POINTS
ATTACH SHOCK CORD HERE
ATTACH LIMITING CABLE HERE

VIEW A-A
SCALE ~ HALF SIZE
APPLIES TO MODEL J3, J3C, PA-11, J3F, J3L, J4, J4A, J5A, J5B, PA-15 AND PA-17.

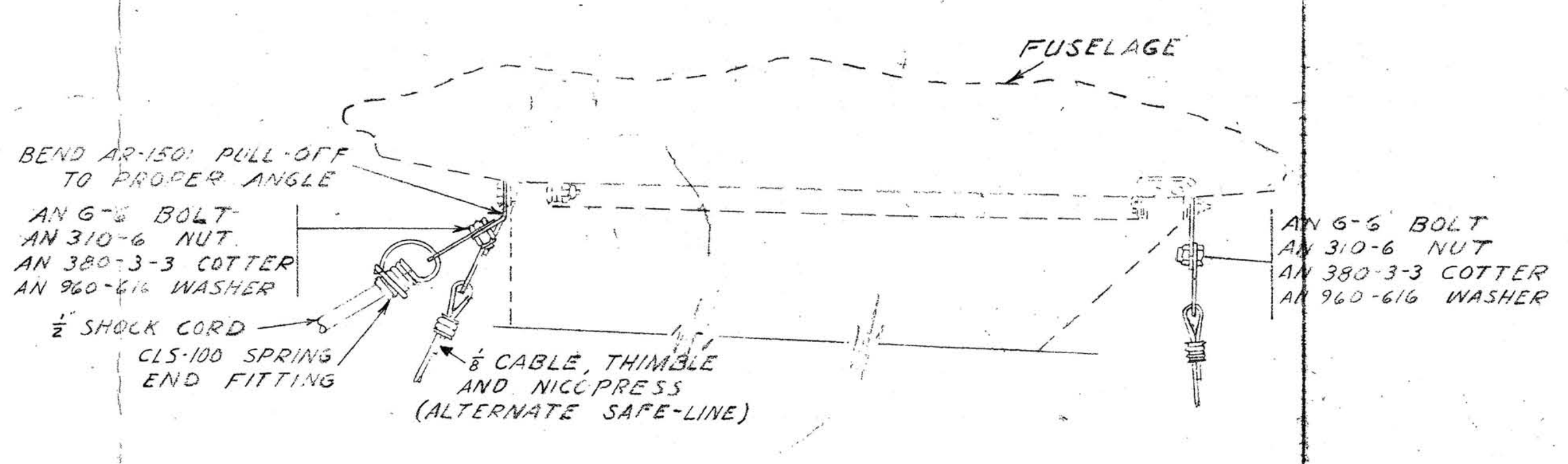
FUSELAGE
BEND AR-1501 PULL-OFF TO PROPER ANGLE
AN 6-6 BOLT
AN 310-6 NUT
AN 380-3-3 COTTER
AN 960-616 WASHER
1/2" SHOCK CORD
CLS-100 SPRING END FITTING
1/8 CABLE, THIMBLE AND NICOPRESS (ALTERNATE SAFE-LINE)
AN 6-6 BOLT
AN 310-6 NUT
AN 380-3-3 COTTER
AN 960-616 WASHER

LANDING GEAR 'V'
SCALE ~ 1/4 SIZE

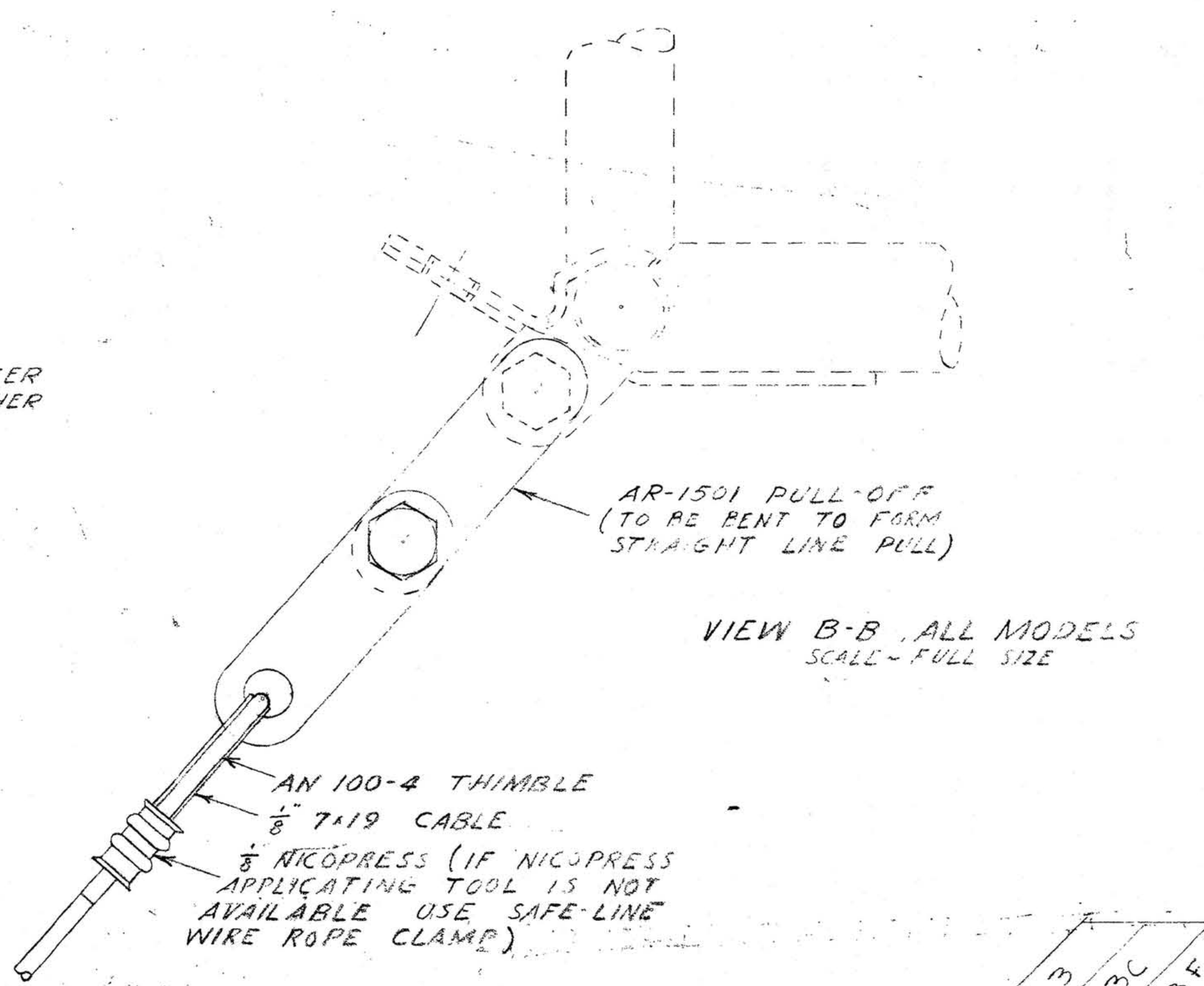
AR-1501 PULL-OFF (TO BE BENT TO FORM STRAIGHT LINE PULL)
AN 100-4 THIMBLE
1/8" 7×19 CABLE
1/8 NICOPRESS (IF NICOPRESS APPLICATING TOOL IS NOT AVAILABLE USE SAFE-LINE WIRE ROPE CLAMP)

VIEW B-B, ALL MODELS
SCALE ~ FULL SIZE

REVISIONS

LETTER	DATE	CHANGE	BY	APPR.
A1	10-19-48	WORD "RIGGING" ADDED	[illegible]	[illegible]
A2	10-19-48	MODEL PA-16 ADDED	[illegible]	[illegible]
A3	10-19-48	NOTE RE: PA-15 ADDED	[illegible]	
B	2-12-49	MODEL PA-16 INCLUDED	[illegible]	[illegible]
C	10-14-49	WAS AN4627 EYE-BOLT	Æ	[illegible]
D	7-17-50	PA-20 AND PA-20"115" ADDED	[illegible]	[illegible]
E	1-5-53	ADDED ALL DATA AND SECTION C-C PERTINENT TO A-2500A SKIS ON PA-20 TO F/L & P/L.	Æ	[illegible]
F1	2-13-53	ADDED CABLE AND NOTE	Æ	[illegible]
F2	2-13-53	REMOVED - WHEREVER POSSIBLE	Æ	[illegible]
G1	3-25-53	ADDED NOTE	Æ	
G2	4-7-53	ADDED ALTERNATE VIEW "D" PERTAINING TO A-2500A SKI AND ALL PERTINENT DATA	Æ	[illegible]
H	1-20-54	ADDED PA-18 & PA-19 TO NOTE	AB	[illegible]
J	4-12-54	ADDED CHART & REVISED NOTES	Æ	[illegible]

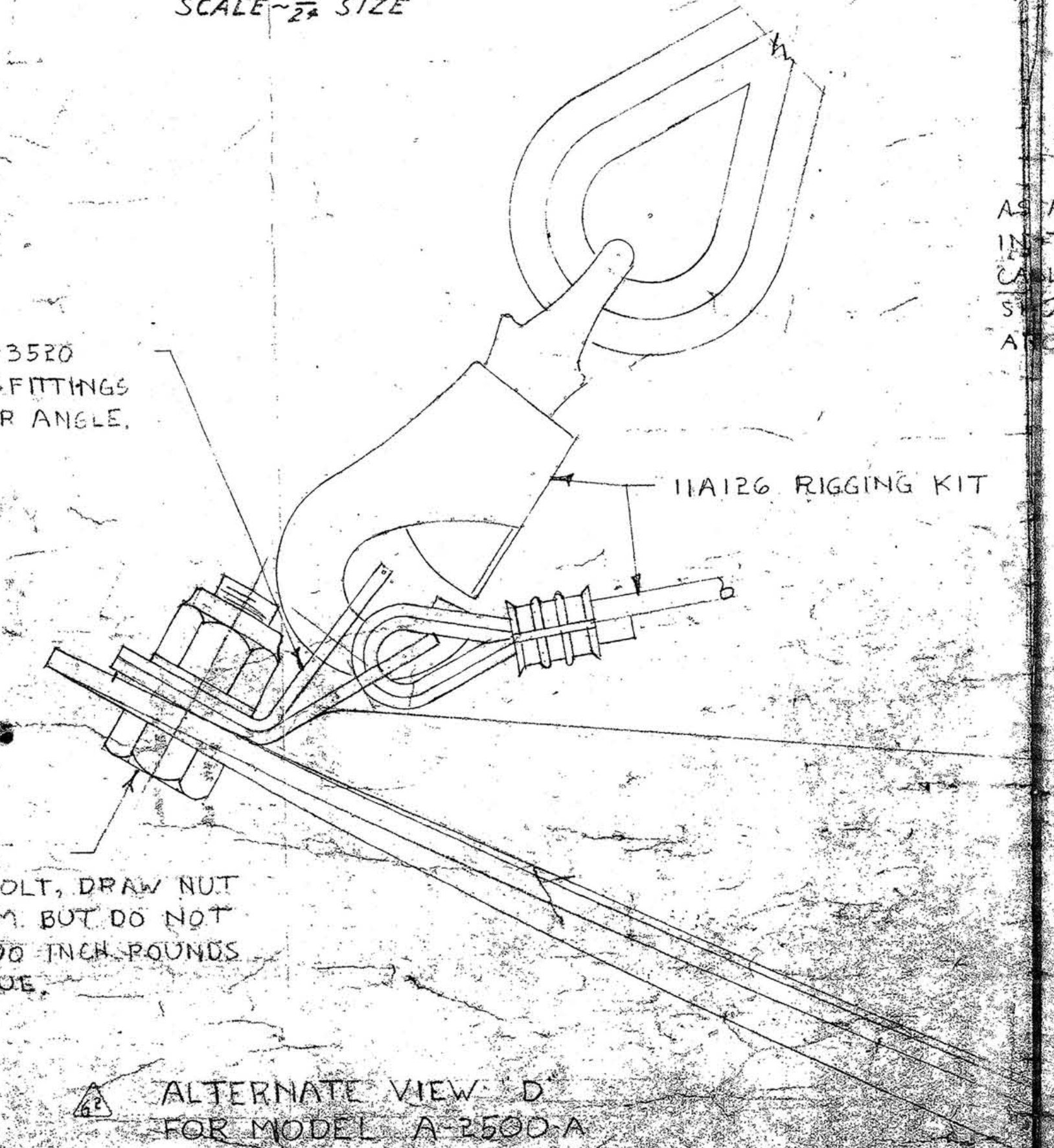
BEND AR-3520 PULL-OFF FITTINGS TO PROPER ANGLE.
11A126 RIGGING KIT
NOTE:
WITH 1/2" BOLT, DRAW NUT DOWN FIRM BUT DO NOT EXCEED 690 INCH POUNDS OF TORQUE.

G2 ALTERNATE VIEW 'D' FOR MODEL A-2500-A

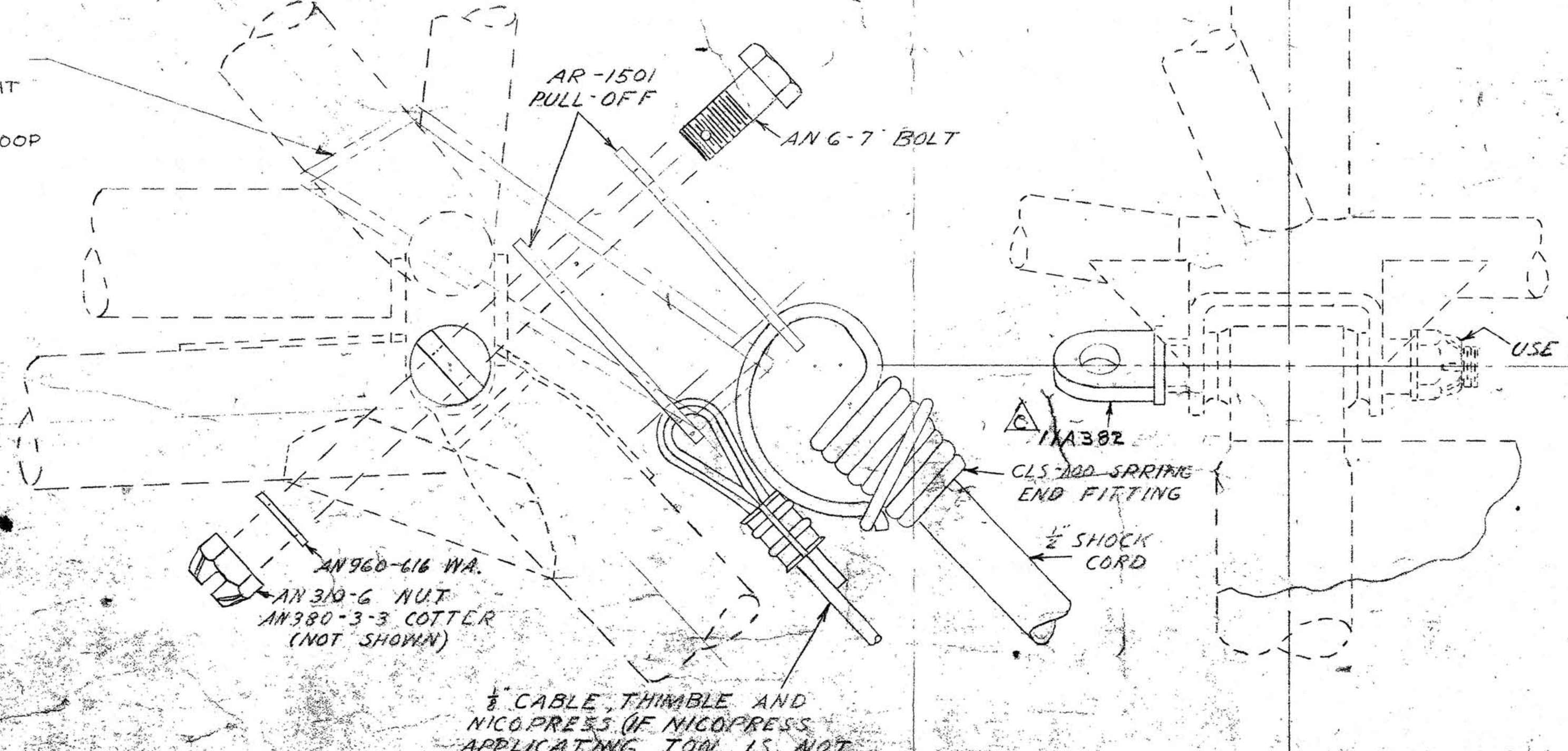
F1
AS AN ADDED SAFETY PRECAUTION, INSTALL AN ADDITIONAL INDEPENDENT CABLE THRU THE THIMBLE EYE AND SHOCK CORD RING AND SECURELY LOOP AROUND THE STRUT AS SHOWN.
AR-1501 PULL-OFF
AN 6-7 BOLT
USE EXISTING NUT
C 11A382
CLS-100 SPRING END FITTING
1/2" SHOCK CORD
AN960-616 WA.
AN310-6 NUT
AN380-3-3 COTTER (NOT SHOWN)
1/8" CABLE, THIMBLE AND NICOPRESS (IF NICOPRESS APPLICATING TOOL IS NOT AVAILABLE USE SAFE-LINE WIRE ROPE CLAMP)

VIEW A-A (ALTERNATE)
SCALE ~ FULL SIZE
APPLIES TO MODEL J5C, PA-12, & PA-14

	J3	J3C	J3F	J3L	J4	J4A	J5A	J5B	J5C	PA-11	PA-12	PA-14	PA-15	PA-16	PA-17	PA-18	PA-19	PA-20	PA-20 "115"	PA-20 "135"
A-1500	X	X	X	X	X	X	X	X		X			X		X	X	X			
A-1500A	X	X	X	X	X	X	X	X		X			X		X	X	X			
A-1850	X	X	X	X	X	X	X	X	X	X	X	X	X	X	X	X	X	X	X	X
A-2000	X	X	X	X	X	X	X	X	X	X	X	X	X	X	X	X	X	X	X	X
A-2000A	X	X	X	X	X	X	X	X	X	X	X	X	X	X	X	X	X	X	X	X
A-2500A																		X	X	X
CA-1850-8	X	X	X	X	X	X	X	X	X	X	X	X	X	X	X	X	X			
RIGGING KIT 11A129	X	X	X	X	X	X	X	X	X	X	X	X	X	X	X	X	X	X	X	X
ADAPTER KIT 11A112	X	X	X	X	X	X	X	X	X	X	X	X	X	X	X	X	X	X	X	X
BUSHING SET 11A102	X	X	X	X	X	X	X	X	X	X	X	X	X	X	X	X	X	X	X	X
RIGGING KIT 11A126																		X	X	X
BUSHING SET 11A289																		X	X	X
RIGGING ATTACH. KIT - 11A261									X		X	X								

J

GENERAL NOTES:

1. MODELS A-1500 THRU A-2000A MAY BE USED ON PA-15 ONLY IF THE ORIGINAL LANDING GEAR IS REPLACED WITH SHOCK CORD STRUT AS INSTALLED ON MODEL PA-17 (PIPER PART NUMBER 11805.)
2. THE WEIGHT OF THE WHEELS MUST BE DEDUCTED FROM THE WEIGHT OF THE SKI INSTALLATION TO FIND THE NET CHANGE, EXCEPT WHEN USING SKI MODEL CA-1850-8.
3. ADD 0.35# TO WEIGHT OF INSTALLATION WHEN 11A261 KIT IS USED.

TABLE OF WEIGHTS

	A-1500	A-1500A	A-1850	A-2000	A-2000A	CA-1850-8	A-2500A
MAIN SKIS PER PAIR	28.50	31.12	29.74	32.74	40.00	46.00	64.75
RIGGING KIT (11A129)	3.75	3.75	3.75	3.75	3.75	3.75	
ADAPTER KIT (11A112)	3.25	3.25	3.25	3.25	3.25		
BUSHING SET (11A102)	1.25	1.25	1.25	1.25	1.25		
RIGGING KIT (11A126)							6.00
BUSHING SET (11A289)							3.75
TOTAL WT. PER INSTALL	36.75	39.37	37.99	40.99	48.25	49.75	74.50

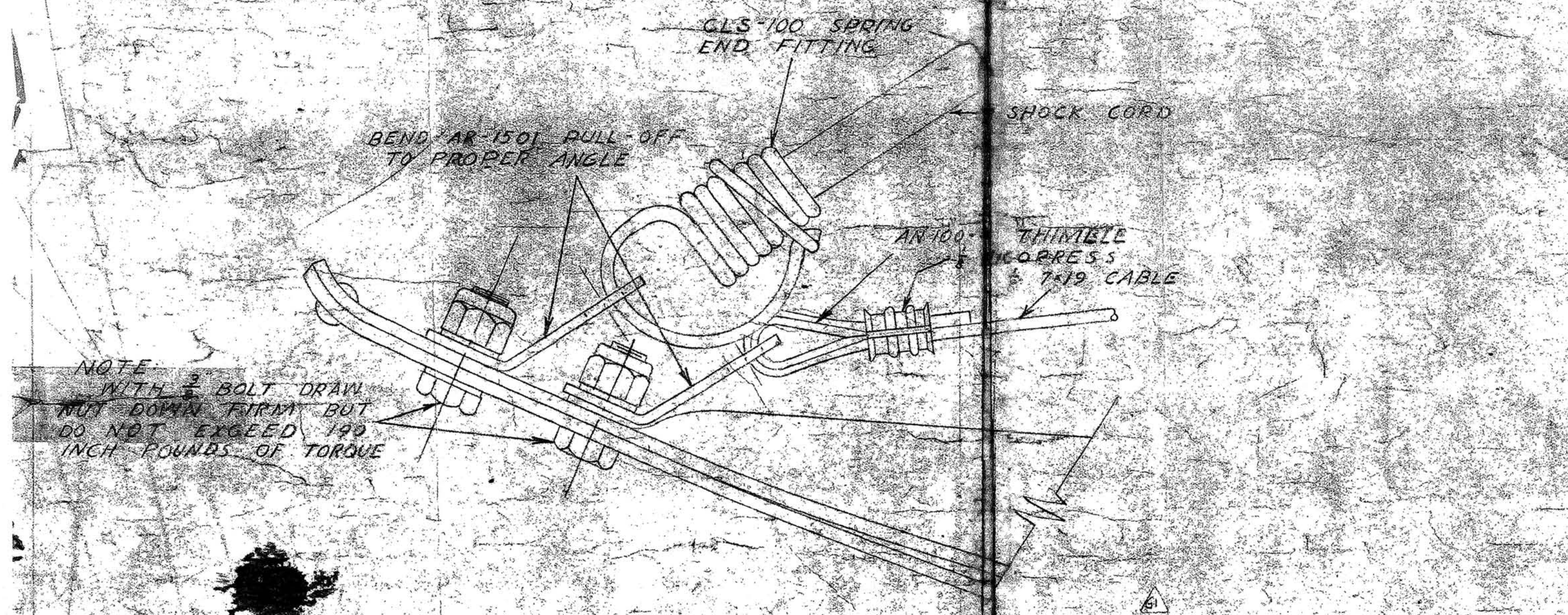
CLS-100 SPRING END FITTING
SHOCK CORD
BEND AR-1501 PULL-OFF TO PROPER ANGLE
AN 100-4 THIMBLE
1/8 NICOPRESS
1/8 7×19 CABLE
NOTE:
WITH 3/8 BOLT DRAW NUT DOWN FIRM BUT DO NOT EXCEED 190 INCH POUNDS OF TORQUE
G1

VIEW D, ALL MODELS EXCEPT A-2500A FOR WHICH SEE ALTERNATE VIEW "D" ABOVE
SCALE ~ FULL SIZE

NOTES REGARDING SHOCK CORD AND CABLE LENGTHS

MAIN SKI:

THE FRONT LIMITING CABLE SHOULD BE OF SUCH A LENGTH THAT WHEN THERE IS NO LOAD ON THE GEAR AND AIRPLANE IS IN FLYING POSITION THE SKI CAN PITCH NOSE DOWN 25° (15° ON MODEL J4 & J4A) MEASURED ON TOP OF THE CHANNEL RELATIVE TO THE LEVEL OR REFERENCE LINE.

AFT LIMITING CABLE TO ALLOW THE SKI TO PITCH NOSE UP 4° MEASURED WITH CONDITIONS AS ABOVE.

SHOCK CORD TO BE PRELOADED 1.5 TO 2.0 INCHES WHEN AFT CABLE IS TAUT AND NO LOAD IS ON GEAR.

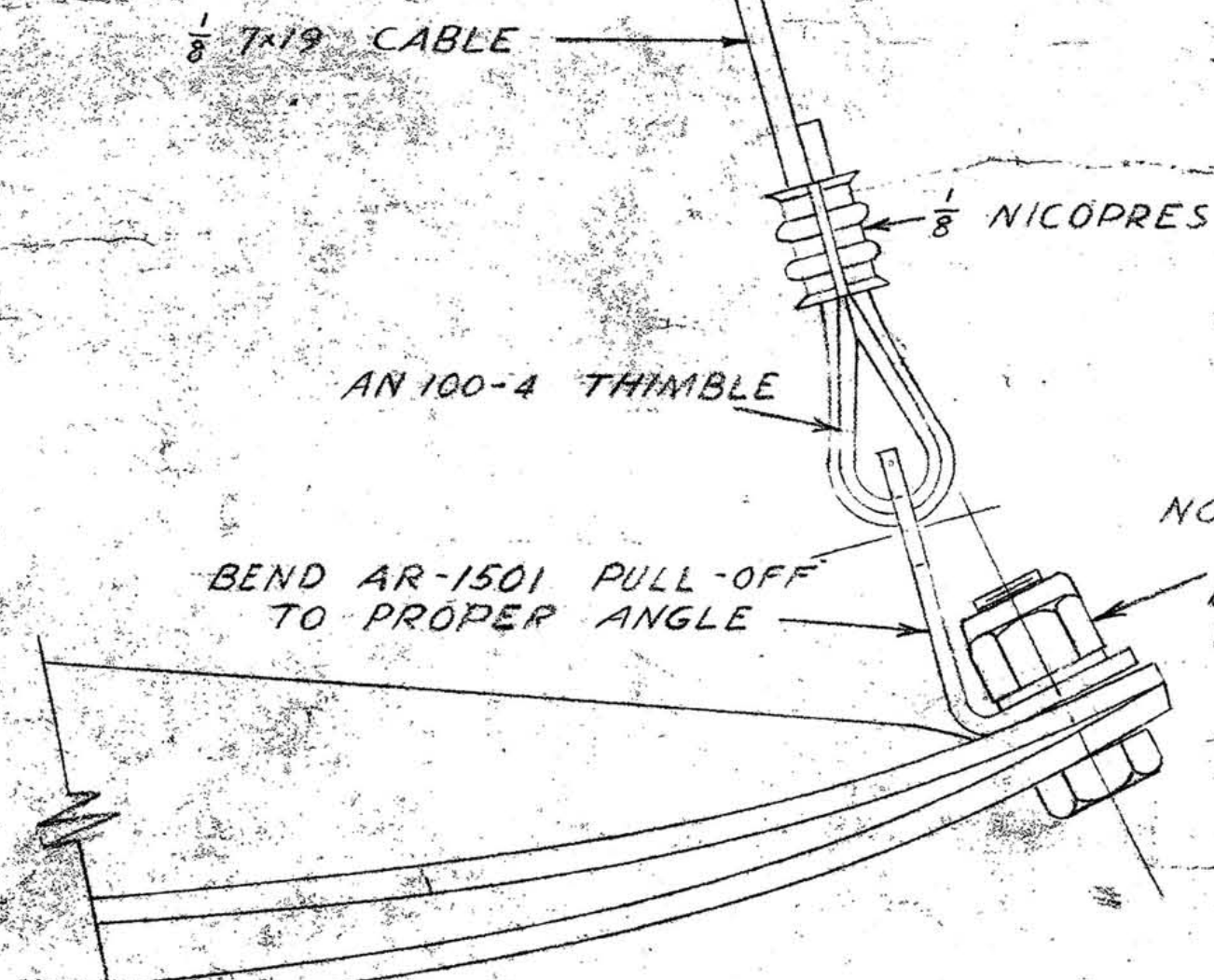
1/8 7×19 CABLE
1/8 NICOPRESS
AN 100-4 THIMBLE
BEND AR-1501 PULL-OFF TO PROPER ANGLE
NOTE:
WITH 3/8" BOLT DRAW NUT DOWN FIRM BUT DO NOT EXCEED 190 INCH POUNDS OF TORQUE.

VIEW E, ALL MODELS
SCALE ~ FULL SIZE

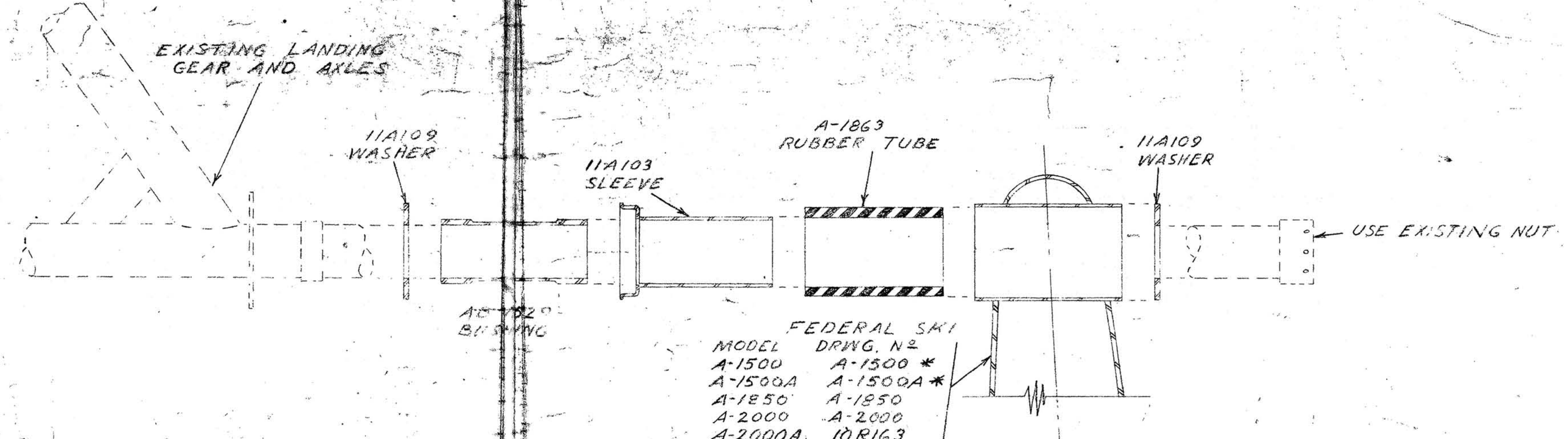
EXISTING LANDING GEAR AND AXLES
11A109 WASHER
AC-1529 BUSHING
11A103 SLEEVE
A-1863 RUBBER TUBE
11A109 WASHER
USE EXISTING NUT

MODEL	FEDERAL SKI DRWG. Nº
A-1500	A-1500 *
A-1500A	A-1500A *
A-1850	A-1850
A-2000	A-2000
A-2000A	10R163

SECTION C-C, ABOVE MODELS ONLY
SCALE ~ HALF SIZE

FOR SKI MODEL CA-1850-6
SEE DWG. NO. 11B163

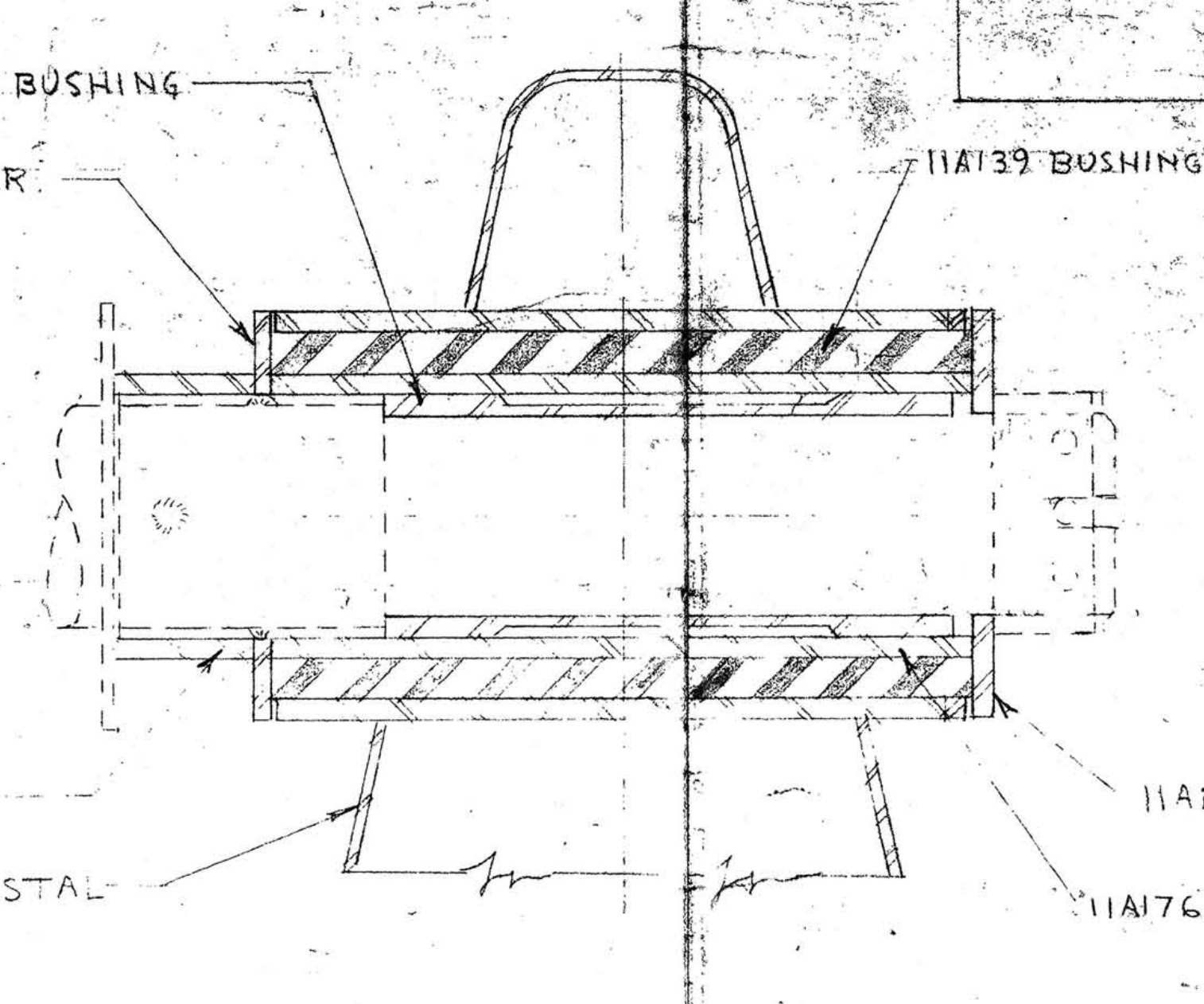
AB-1529 BUSHING
11A137 WASHER
11A139 BUSHING
11A287 SPACER
A-2500A SKI PEDESTAL
11A288 WASHER
11A176 BUSHING

NOTES:
1. USE EXISTING NUT.
2. IF CROWN OF ROSETTE WELD DOES NOT ALLOW SUFFICIENT CLEARANCE IT MAY BE FILED OR GROUND TO FIT.
3. BRAKES TO BE REMOVED
4. USE BUSHING SET NUMBER 11A289

E

SECTION C-C A-2500A SKIS ON PIPER PA-20
FULL SIZE

NOTE:
THERE MAY BE SLIGHT VARIATIONS IN THE RIGGING ATTACHMENT POINTS ON THE AIRPLANES OF DIFFERENT MODELS. IN THIS CASE THIS DRAWING IS TO SERVE AS A GUIDE. THE LENGTHS OF THE LIMITING CABLES AND SHOCK CORDS TO BE AS SPECIFIED.

NOTE:
COMPLIANCE WITH THIS DRAWING DOES NOT CONSTITUTE AUTOMATIC APPROVAL OF THE SKI INSTALLATION. FINAL APPROVAL MUST BE OBTAINED FROM THE C.A.A. INSPECTOR.

11R262 J

(**) WHEN SKI MODEL CA-1850-8 IS INSTALLED BUSHING SET (11A102) AND ADAPTER KIT (11A112) ARE NOT REQUIRED

FOR USE WITH A-2500A SKIS ON PA-20 ONLY

	NO. REQ.	DESCRIPTION	
	1	RIGGING KIT	11A126
	1	BUSHING SET	11A289
	1	RIGGING KIT	11A129
	1	RIGGING ATTACH. KIT	11A261
**	1	BUSHING SET	11A102
**	1	ADAPTER KIT	11A112
	1	~~MAIN SKI MODEL CA-1850-8~~	10R211
SEE CHART		MAIN SKI MODEL A-1500 *	A-1500
		MAIN SKI MODEL A-1500A *	10R2391
		MAIN SKI MODEL A-1850	A-1850
		MAIN SKI MODEL A-2000	A-2000
		MAIN SKI MODEL A-2000A	10R163
E		MAIN SKI MODEL A-2500A	10R113

REQD.	NEXT ASSEMBLY	MODEL	FINISH	DASH NO.
WT. SEE TABLE	SCALE NOTED		HEAT TREAT	

UNLESS OTHERWISE SPECIFIED
1. DIMENSIONS SHALL BE MET AFTER PLATING.
2. SHARP EDGES SHALL BE BROKEN .010-R.
3. FINISHED PART SHALL BE FREE OF BURRS.
4. LIMITS ON DIMENSIONS UNLESS OTHERWISE SPECIFIED—
ONE PLACE DECIMALS (1.0) ± .100.
TWO PLACE DECIMALS (1.00) ± .010.
THREE PLACES DECIMALS (1.000) ± .001.
FOUR PLACE DECIMALS (1.0000) ± .0001
ANGLES [illegible]

CHECK D. [illegible] 7-16-48
DRAWN C.K.B. 7-16-48

FEDERAL AIRCRAFT WORKS
MINNEAPOLIS, MINN., U.S.A.

TITLE
INSTALLATION, FEDERAL SKI
PIPER AIRCRAFT

11R262 J